Electronic housing - ME 22,5 F-UTG BUS/10 GN - 2736000

Please be informed that the data shown in this PDF Document is generated from our Online Catalog. Please find the complete data in the user's documentation. Our General Terms of Use for Downloads are valid
(http://phoenixcontact.com/download)

Component housing without vents, Lower part, Cross connection: integrated bus connector, color: green, width: 22.5 mm, length: 99 mm, height: 106 mm, number of positions cross connector: 10

Why buy this product

- Item is from the ME product range
- Tool-free mounting
- Available in overall widths from 12.5 mm to 90 mm, modular extension is possible
- Inflammability class V0 according to UL 94
- Variety of connection technologies
- Can be mounted on the DIN rail
- Optional bus connector that is either integrated or mounted on the DIN rail

RoHS

Key Commercial Data

Packing unit	10 STK
GTIN	4 017918 820985
GTIN	4017918820985
Weight per Piece (excluding packing)	40.420 g
Custom tariff number	85369010
Country of origin	Germany
Note	Made to Order (non-returnable)

Technical data

General

Housing type	Component housing
Housing material	Polyamide
Color (RAL)	green

Ambient conditions

Ambient temperature (storage/transport)	-40 °C ... 70 °C

Electroustic Ltd www.electroustic.co.uk +44 (0)1908 307200

Electronic housing - ME 22,5 F-UTG BUS/10 GN - 2736000

Technical data

Ambient conditions

Ambient temperature (assembly)	-5 °C ... 100 °C
Ambient temperature (operation)	-40 °C ... 105 °C (depending on power dissipation)

Dimensions

Length	99 mm
Constructional height	106 mm
Width	22.5 mm
Depth	99 mm
	102 mm

Technical data

Connection in acc. with standard	CUL
Nominal voltage U_N	300 V
Nominal current I_N	8 A
Indicator1	CUL1
Power dissipation without gap	5.5 W
Power dissipation with 20 mm gap	9.6 W
Number of positions	16
	24

Standards and Regulations

Connection in acc. with standard	CUL
Flammability rating according to UL 94	V0

Environmental Product Compliance

China RoHS	Environmentally friendly use period: unlimited = EFUP-e
	No hazardous substances above threshold values

Drawings

Electroustic Ltd www.electroustic.co.uk +44 (0)1908 307200

Electronic housing - ME 22,5 F-UTG BUS/10 GN - 2736000

Dimensional drawing

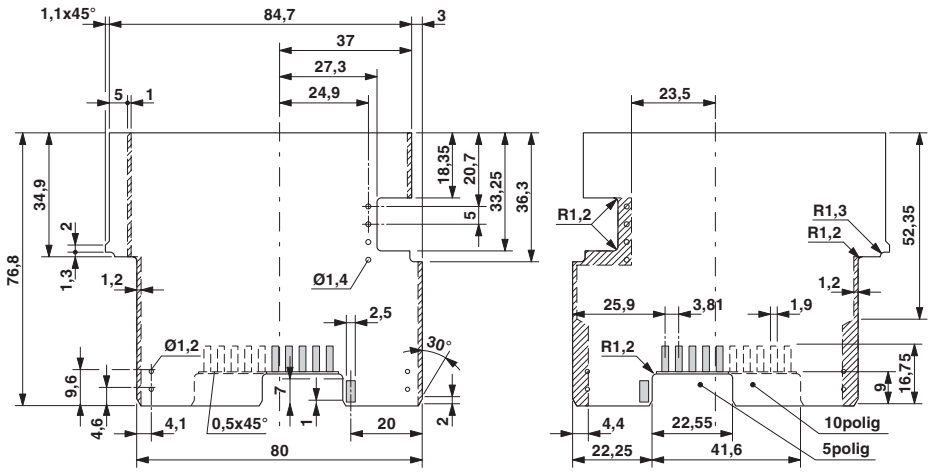

Dimensional drawing of the ME 22.5 flat.../BUS 5 and ME 22.5 flat.../BUS 10 printed circuit boards if the single-level upper part is used

Dimensional drawing

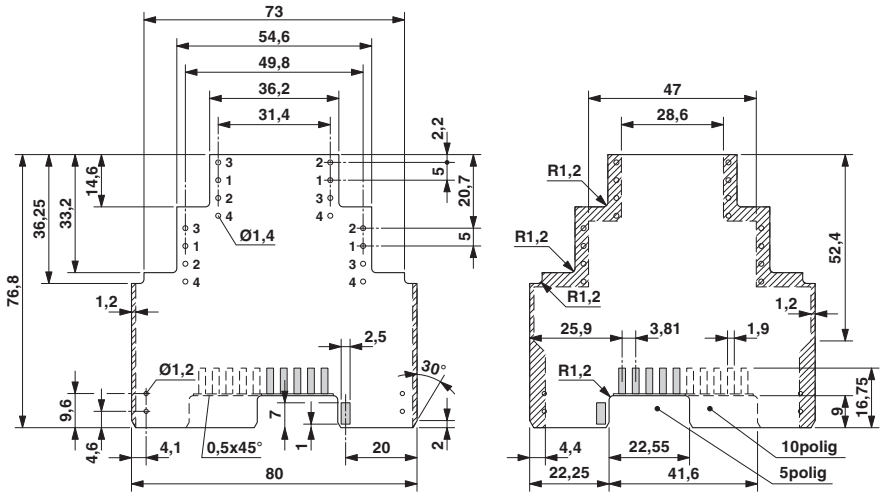

Dimensional drawing of the ME 22.5 flat.../BUS 5 and ME 22.5 flat.../BUS 10 printed circuit boards if the double-level upper part is used

Electroustic Ltd www.electroustic.co.uk +44 (0)1908 307200

Electronic housing - ME 22,5 F-UTG BUS/10 GN - 2736000

Dimensional drawing

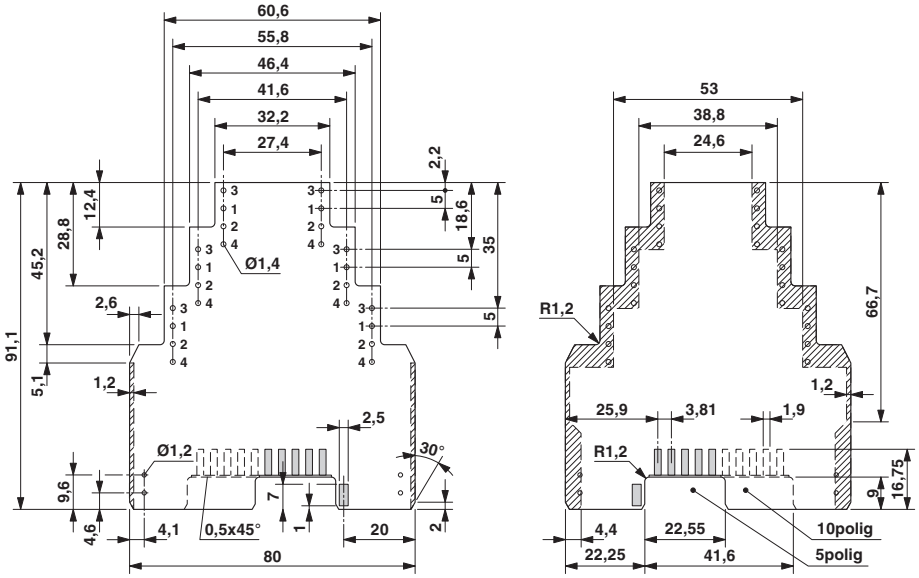

Dimensional drawing of the ME 22.5 flat.../BUS 5 and ME 22.5 flat.../BUS 10 printed circuit boards if the triple-level upper part is used

Classifications

eCl@ss

eCl@ss 4.0	27180401
eCl@ss 4.1	27180401
eCl@ss 5.0	27180506
eCl@ss 5.1	27180506
eCl@ss 6.0	27180802
eCl@ss 7.0	27182702
eCl@ss 8.0	27182702
eCl@ss 9.0	27182702

ETIM

ETIM 2.0	EC001031
ETIM 3.0	EC001031
ETIM 4.0	EC001031
ETIM 5.0	EC001031
ETIM 6.0	EC001031

UNSPSC

UNSPSC 6.01	31261501
UNSPSC 7.0901	31261501
UNSPSC 11	31261501
UNSPSC 12.01	31261501

Electroustic Ltd www.electroustic.co.uk +44 (0)1908 307200

Electronic housing - ME 22,5 F-UTG BUS/10 GN - 2736000

Classifications

UNSPSC

UNSPSC 13.2	31261501

Approvals

Approvals

Approvals

UL Recognized / cUL Recognized / UL Recognized / cULus Recognized

Ex Approvals

Approval details

UL Recognized	http://database.ul.com/cgi-bin/XYV/template/LISEXT/1FRAME/index.htm	FILE E 240868

cUL Recognized	http://database.ul.com/cgi-bin/XYV/template/LISEXT/1FRAME/index.htm	FILE E 60425

	B	D
Nominal current IN	8 A	8 A
Nominal voltage UN	300 V	300 V

UL Recognized	http://database.ul.com/cgi-bin/XYV/template/LISEXT/1FRAME/index.htm	FILE E 60425

	B	D
Nominal current IN	8 A	8 A
Nominal voltage UN	300 V	300 V

cULus Recognized	http://database.ul.com/cgi-bin/XYV/template/LISEXT/1FRAME/index.htm	

Accessories

Accessories

Filler plug

Electroustic Ltd www.electroustic.co.uk +44 (0)1908 307200

Electronic housing - ME 22,5 F-UTG BUS/10 GN - 2736000

Accessories

Electronic housing - ME B-SA/NS 35 - 2935959

Terminal cover, 1 strip covers up to 12 terminal points, for ME-BUS male side, (female side)

Electronic housing - ME B-KA - 2854173

Terminal cover, 1 strip covers up to 12 terminal points, for ME-BUS terminal opening, (male side)

Mounting material

Electronic housing - ME DH27 NS 35 - 2908760

Spacers, for protection of the input or output contacts for DIN rail NS 35, width [B] 27 mm

---

Electronic housing - ME LPZS - 2906911

Component housing

Printed-circuit board connector - IMC 1,5/10-ST-3,81 AU - 1943289

Plug component, nominal current: 8 A, rated voltage (III/2): 160 V, number of positions: 10, pitch: 3.81 mm, connection method: Screw connection with tension sleeve, color: green, contact surface: Gold

---

Electroustic Ltd www.electroustic.co.uk +44 (0)1908 307200

Electronic housing - ME 22,5 F-UTG BUS/10 GN - 2736000

Accessories

Printed-circuit board connector - MC 1,5/10-ST-3,81 AU - 1879599

Plug component, nominal current: 8 A, rated voltage (III/2): 160 V, number of positions: 10, pitch: 3.81 mm, connection method: Screw connection with tension sleeve, color: green, contact surface: Gold

---

Necessary add-on products

Electronic housing - ME 22,5 OT-1MSTBO GN - 2709558

Component housing, Upper part, color: green, width: 22.5 mm, length: 99 mm, height: 38.5 mm

---

Electronic housing - ME 22,5 OT-MSTBO GN - 2907169

Component housing, Upper part, color: green, width: 22.5 mm, length: 99 mm, height: 38.5 mm

---

Electronic housing - ME 22,5 OT-MKDSO GN - 2907172

Component housing, Upper part, color: green, width: 22.5 mm, length: 99 mm, height: 38.5 mm

---

Phoenix Contact 2017 © - all rights reserved
http://www.phoenixcontact.com

Electroustic Ltd www.electroustic.co.uk +44 (0)1908 307200