ELECTROUSTIC
DISTRIBUTION OF CONNECTIVITY SOLUTIONS

HIRSCHMANN

Product information
GDML 2016 LED 230 VR YE schwarz/black

Name	**GDML 2016 LED 230 VR YE schwarz/black**
	function indicator (LED) with freewheeling diode and protective circuit (varistor)
Delivery informations	
Availability	available
Product description	
Description	function indicator (LED) with freewheeling diode and protective circuit (varistor)
Type	GDML 2016 LED 230 VR YE schwarz/black
Order No.	934 426-002
Other standard types	transparent housing, cable gland grey: Order no. 934 426-003
Number of contacts	2 + PE
Cable gland	M 16 (black)
Conductor size	max. 1.5 mm²
Standard	DIN EN 175 301-803-A
Housing Color	transparent
Construction type	A
Description of Wiring	
LED color	LED yellow
Suppressor	varistor
Technical data	
Pin dimensions	6.3 mm x 0.8 mm, 4.8 mm x 0.8 mm
Rated voltage	AC/DC 250 V
Rated current	8 A
Contact resistance	<= 4 mOhm
Type of termination	screw
Suitable cables	4.5 mm to 10 mm diameter
Mounting	central nut
Material	
Contact surface material	Sn
Contact bearer material	PA
Housing material	PA
Environmental conditions	
Protection class (IEC 60529)	IP 65 (gasket necessary)
Pollution severity	3
Temperature range	-40 °C to +90 °C
Inflammability class	
Housing	94 HB
Contact bearer	94 HB
Packing unit	
Packaging unit	50 pieces
Scope of delivery and accessories	
Accessories to order separately	(NBR) flat gasket GDM 3-7, Order no. 730 801-002; (EPDM) flat gasket GDM 3-21, Order no. 731 739-004; profiled gasket GDM 3-16, Order no. 731 531-002; knurled screw GDM 3011-8, Order no. 732 574-001; stainless steel screw GDM 3011 RF-1, Order no. 734 363-001

The information published has been compiled as carefully as possible. It is subject to alteration without notice in technical as well as in price related/commercial respect.

Picture

Drawing

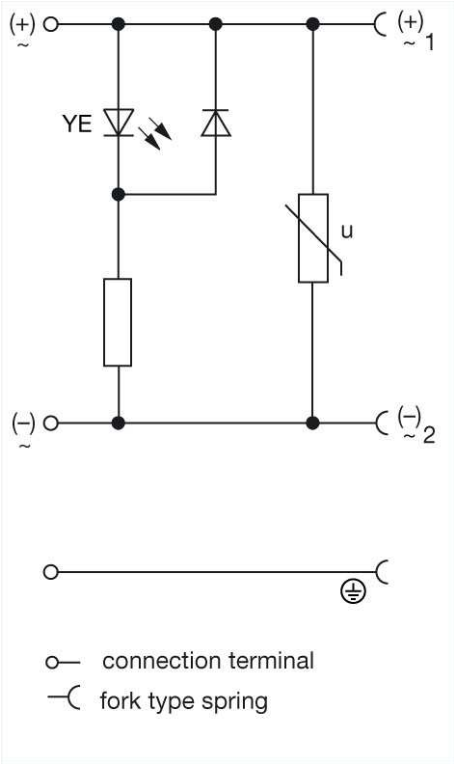

The information published has been compiled as carefully as possible. It is subject to alteration without notice in technical as well as in price related/commercial respect.