SKINTOP® STR

SKINTOP® STR, increased oil-resistant polyamide cable gland with wide, variable clamping range and reducing seal insert

Variety of approval certifications

Temperature-resistant

Optimum strain relief

Mechanical resistance

Good chemical resistance

Benefits
High oil resistance for maximum functional reliability
Permanent vibration protection
Optimum strain relief
Wide, variable clamping ranges
Various accessories (e.g. multiple sealing inserts)

Application range
With reducing seal insert, to seal cables with smaller outer diameters.

Norm references / approvals
UL file no. E79903

Design
PG connection thread

Last Update (14.03.2017)
©2017 Lapp Group - Technical changes reserved
Product Management www.lappkabel.de
You can find the current technical data in the corresponding data sheet.
PN 0456 / 02_03.16

SKINTOP® STR

Note

Refer to SKINTOP® PG accessories for suitable accessories
Counter nut to be used: SKINTOP® GMP-GL

Technical Data

Classification:	ETIM 5.0 Class-ID: EC000441 ETIM 5.0 Class-Description: Cable gland
Caution:	Refer to T21 for the installation dimensions and tightening torques
Colour delivered:	RAL 7001 silver grey RAL 7035 light grey RAL 9005 black/UV-resistant
Material:	Body: Polyamide Seal: CR
Tests:	GGVS: TÜ.EGG.020-95
Protection rating:	IP 68 - 5 bar
Temperature range:	-20°C to +80°C

Note

Photographs are not to scale and do not represent detailed images of the respective products.
* Prices are net prices without VAT and surcharges. Sale to business customers only.

©2017 Lapp Group - Technical changes reserved

Electroustic Ltd www.electroustic.co.uk +44 (0)1908 307200

SKINTOP® STR

Article number	Article designation / size	Clamping range ØF (mm)	SW mm	Total length C (mm)	Thread length, D (mm)
SKINTOP® STR silver-grey					
53015100	PG 7	1.5 - 5	15	32	8
53015110	PG 9	2 - 6	19	36	8
53015120	PG 11	2 - 7	22	38	8
53015130	PG 13,5	4 - 9	24	41	9
53015140	PG 16	6 - 12	27	44	10
53015150	PG 21	9 - 16	33	49	11
53015160	PG 29	11 - 20	42	56	11
53015170	PG 36	17 - 26	53	66	13
53015180	PG 42	22 - 31	60	68	13
53015190	PG 48	26 - 35	65	69	14
SKINTOP® STR black					
53015300	PG 7	1.5 - 5	15	32	8
53015310	PG 9	2 - 6	19	36	8
53015320	PG 11	2 - 7	22	38	8
53015330	PG 13,5	4 - 9	24	41	9
53015340	PG 16	6 - 12	27	44	10
53015350	PG 21	9 - 16	33	49	11
53015360	PG 29	11 - 20	42	56	11
53015370	PG 36	17 - 26	53	66	13
53015380	PG 42	22 - 31	60	68	13
53015390	PG 48	26 - 35	65	69	14
SKINTOP® STR light grey					
53018100	PG 7	1.5 - 5	15	32	8
53018110	PG 9	2 - 6	19	36	8
53018120	PG 11	2 - 7	22	38	8
53018130	PG 13,5	4 - 9	24	41	9
53018140	PG 16	6 - 12	27	44	10
53018150	PG 21	9 - 16	33	49	11
53018160	PG 29	11 - 20	42	56	11
53018170	PG 36	17 - 26	53	66	13
53018180	PG 42	22 - 31	60	68	13
53018190	PG 48	26 - 35	65	69	14

Last Update (14.03.2017)
©2017 Lapp Group - Technical changes reserved
Product Management www.lappkabel.de
You can find the current technical data in the corresponding data sheet.
PN 0456 / 02_03.16

SKINTOP® STR

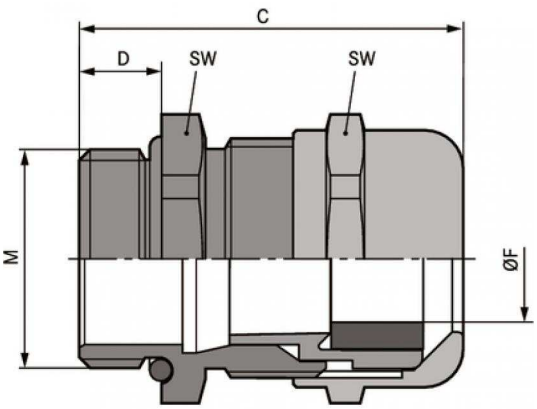

©2017 Lapp Group - Technical changes reserved

Electroustic Ltd www.electroustic.co.uk +44 (0)1908 307200